ANCRA INTERNATIONAL®

Providing Innovative, Timely and Cost Effective Solutions to our Military for over 40 years.

NEW

CGU-8/A AIRCRAFT CHAIN TENSIONER

P/N: 45024-14 (NSN: 1670-00-737-2166)
P/N: 45024-15 (NSN: 1670-00-212-1149)

Weight reduction initiatives will benefit Air Mobility Command through multi-million dollar annual fuel savings!

Product Benefits:

- *Replaces the MB-1 & CGU-4/E Chain Tensioners*
- *Patented Hook Assembly can be rotated 360°*
- *Secondary safety lock feature*
- *Light Weight Design = Increased Fuel Savings*
- *10,000 lbs capacity*
- *Meets requirements of MIL-DTL-25959H*
- *For MIL-DTL-6458 Type I Chain*

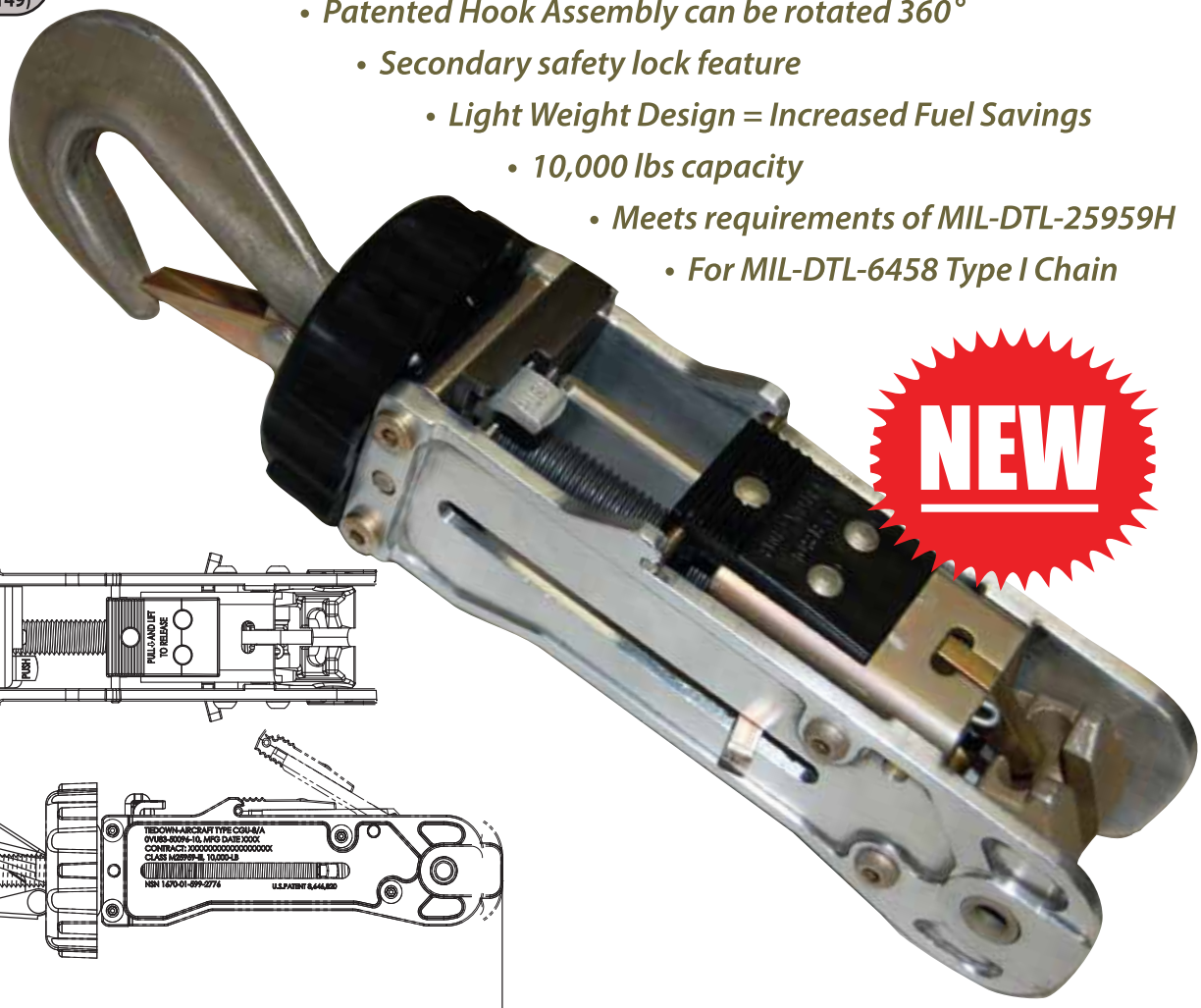

NEW

P/N: 50096-10
NSN: 1670-01-599-2776

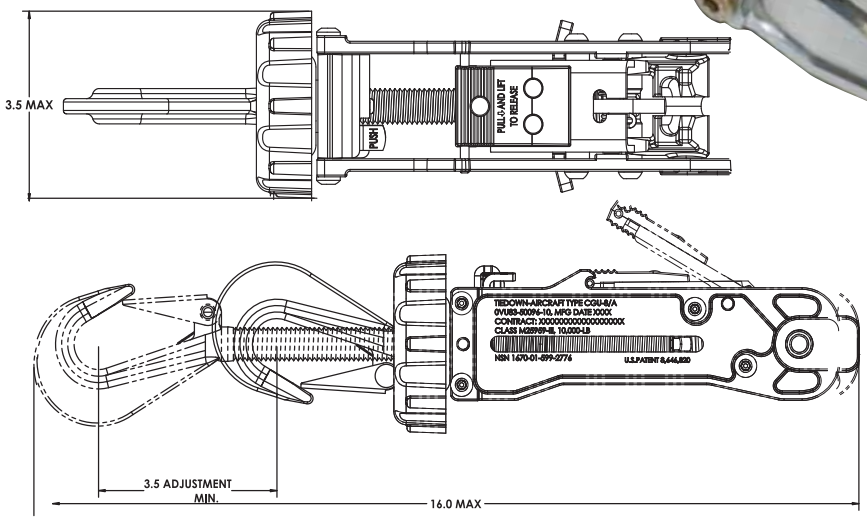

2685 Circleport Drive, Erlanger, KY 41018 • (859) 371-7272 ext. 255 • www.ancra.com

© 2014 Ancra International • All Rights Reserved

M115